Issuing Entity:
Larson International Inc.
P.O. Box 638
Plainview, TX 79073-0638
U.S.A.
Phone 806-293-1353
Fax 806-293-5215
www.larsonintl.com

Bulletin No.: L16-001
Release Date: 3/16/16
Effective Date: Immediately
Supercedes: N/A
Completion Date: N/A

SERVICE BULLETIN

Ride Manufacturer: Larson International Inc. **Affected Production Dates: All**
Ride Name: FLYING SCOOTERS **Affected Serial Nos.: 14-26, 30**

Abstract Of Issue: **Install a set of normally closed contacts in the E-stop button.**

Reason for Release: **A failure of the 120V power supply circuit can cause the E-stop to not stop the ride when pressed.**

Action To Be Taken: **Install a set of normally closed contacts in the E-stop wired as shown on page 2.**

Detail Of Issue:

Revised Electrical Schematic on page 2.

Larson International Inc. issues notifications for the benefit of owners of amusement rides manufactured by Larson International, Inc. As a service to the industry, and in the interest of employee and public safety, Larson International, Inc. also issues notifications for the benefit of owners of amusement ride equipment for which the manufacturer no longer exists such as LMC, Inc. and Hi-Roller Company. In doing so, Larson International, Inc. does not assume liability for losses associated with amusement ride equipment built by manufacturers other than Larson International, Inc.

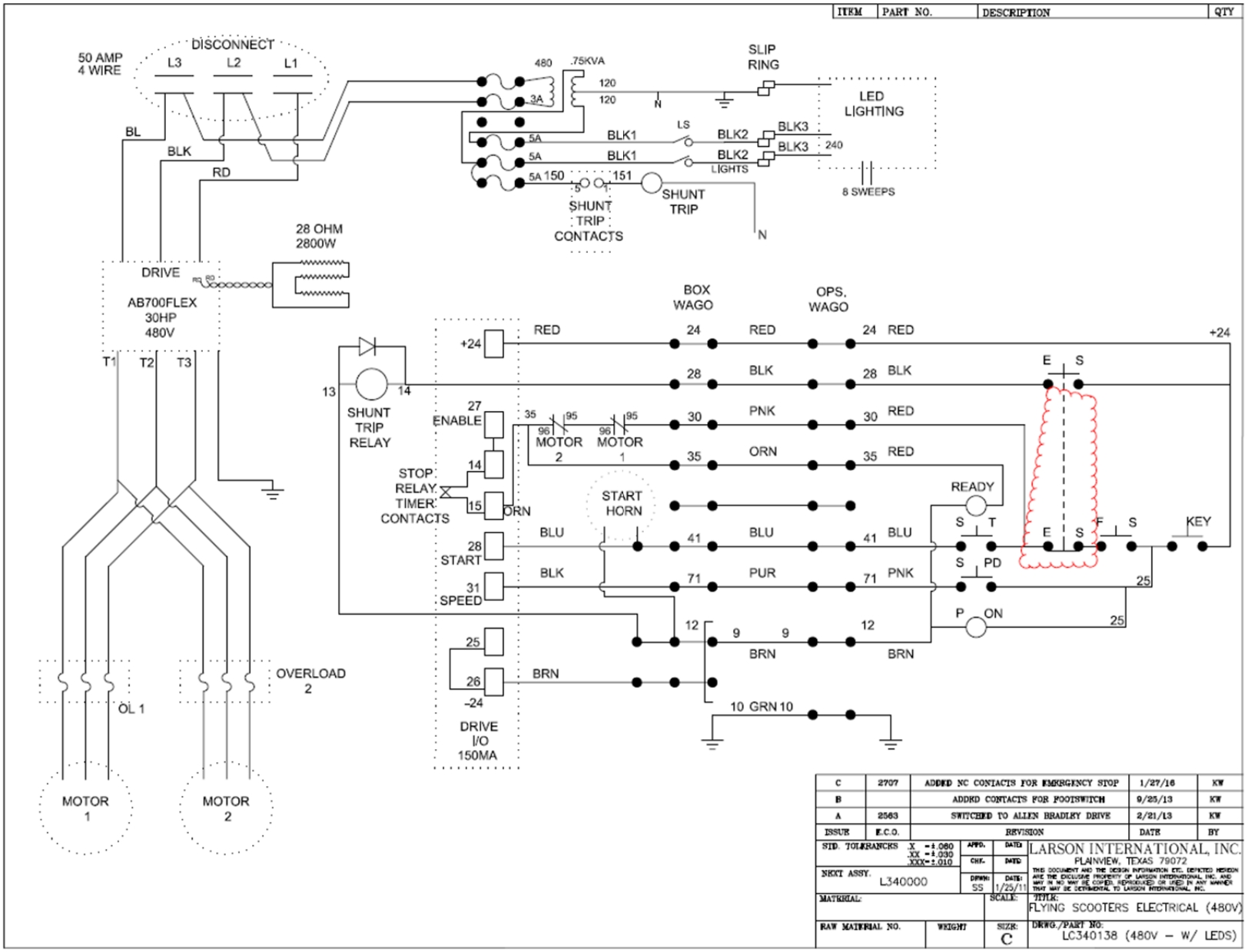
ITEM
PART NO.
DESCRIPTION
QTY
50 AMP
4 WIRE
DISCONNECT
L3
L2
L1
BL
BLK
RD
480
.75KVA
3A
120
120
N
SLIP
RING
LED
LIGHTING
5A
BLK1
LS
BLK2
BLK3
240
LIGHTS
8 SWEEPS
150
151
SHUNT
TRIP
CONTACTS
SHUNT
TRIP
N
28 OHM
2800W
DRIVE
AB700FLEX
30HP
480V
T1
T2
T3
BOX
WAGO
OPS.
WAGO
+24
RED
24
28
BLK
30
PNK
35
ORN
13
14
SHUNT
TRIP
RELAY
27
ENABLE
35
95
96
MOTOR
2
MOTOR
1
STOP
RELAY
TIMER
CONTACTS
15
START
HORN
READY
E
S
T
F
KEY
BLU
41
28
START
PD
71
PUR
PNK
31
SPEED
25
P
ON
12
9
BRN
26
-24
10 GRN 10
DRIVE
I/O
150MA
OVERLOAD
2
OL 1
MOTOR
1
MOTOR
2
C
2707
ADDED NC CONTACTS FOR EMERGENCY STOP
1/27/16
KW
B
ADDED CONTACTS FOR FOOTSWITCH
9/25/13
KW
A
2563
SWITCHED TO ALLEN BRADLEY DRIVE
2/21/13
KW
ISSUE
E.C.O.
REVISION
DATE
BY
STD. TOLERANCES
X =±.060
.XX =±.030
.XXX=±.010
APPD.
DATE
CHK.
DATE
DRWN:
SS
DATE:
1/25/11
NEXT ASSY.
L340000
MATERIAL:
SCALE:
RAW MATERIAL NO.
WEIGHT
SIZE:
C
LARSON INTERNATIONAL, INC.
PLAINVIEW, TEXAS 79072
THIS DOCUMENT AND THE DESIGN INFORMATION ETC. DEPICTED HEREON ARE THE EXCLUSIVE PROPERTY OF LARSON INTERNATIONAL INC. AND MAY IN NO WAY BE COPIED, REPRODUCED OR USED IN ANY MANNER THAT MAY BE DETRIMENTAL TO LARSON INTERNATIONAL INC.
TITLE:
FLYING SCOOTERS ELECTRICAL (480V)
DRWG./PART NO:
LC340138 (480V – W/ LEDS)